Sears

owners manual

MODEL NO.
917.253430

SUBURBAN TRACTOR SHREDDER ATTACHMENT

- Assembly
- Operating
- Maintenance
- Repair Parts

Sears, Roebuck and Co., Chicago, Ill. 60607 U.S.A.
and Simpsons Sears Limited, Toronto

GUARANTEE

During the first year, we will repair your Tractor Shredder Attachment free of charge, if found defective in material or workmanship. This guarantee service is available by simply returning the Tractor Shredder Attachment to any of our stores or service centers throughout the United States or Canada. Guarantee is limited to 30 days if used for commercial purposes.

SEARS, ROEBUCK AND CO.–SIMPSONS–SEARS, LTD.

IMPORTANT
RULES FOR SAFE OPERATION

TRAINING

1. Read the Owners Manual carefully and fully familiarize yourself with the controls and proper use of your tractor and Tractor Shredder attachment. Be prepared to stop the engine and blades on a second's notice. Only persons well acquainted with these Rules for Safe Operation should be allowed to use your tractor and Tractor Shredder attachment.
2. Do not allow children or young teenagers to start or operate your tractor and Tractor Shredder attachment.
3. Do not allow anyone in the area while shredding. Keep the children and pets away from the shredding area. Keep a wary eye out for children or passers-by. Place the blade control lever in the disengaged position and stop the engine while they are in the vicinity of your Tractor Shredder. Children, particularly, could get an extremity in the way of the revolving blades.

PREPARATION

4. Thoroughly inspect the material to be shredded and remove all foreign objects such as rocks, stones, wires, cans, boards, large branches, bones and other foreign objects before shredding. Foreign objects may be propelled by the blades causing injury to the operator, a bystander or a pet or damage to other property, the tractor or the Tractor Shredder attachment itself.
5. Do not operate the tractor and Tractor Shredder attachment when barefoot or wearing open sandals. Always wear safety glasses, substantial footwear, preferably steel-toed shoes. Also, do not wear loose fitting clothing that could get caught in moving parts.
6. Check your fuel supply before each use. Never remove the gas cap or fill the gasoline tank when the engine is running or while it is hot. When filling the fuel tank, leave space for expansion, do not fill it to the brim and keep in mind that the heat of the sun can cause the gasoline to expand. Wipe off any spilled gasoline before starting the engine. Remember, gasoline is highly flammable and must always be handled with extreme care.
7. A tractor with a Tractor Shredder attachment is a precision piece of equipment, not a plaything, therefore, extreme caution must be exercised at all times.
8. Never attempt to operate a damaged tractor or Tractor Shredder attachment, always repair any damage before attempting to start or operate your tractor or Tractor Shredder attachment.
9. Never attempt to carry any passengers, their safety as well as your safety will be endangered.
10. Your tractor with the Tractor Shredder attachment in place is equipped with an engine interlock system. The Tractor Shredder attachment also has an interlock on the hopper. The hopper must be down tight in place before engine will start. This system will prevent the engine from starting if the operator tries to start the engine while the transmission is in gear, the hopper not down tight in place and/or the attachment clutch lever is in the engaged position. Before attempting to start the engine make sure the gear shift lever is in neutral and the attachment clutch lever is in the disengaged position, then firmly apply the foot brake. The parking brake must always be disengaged when you put the tractor in motion. If the tractor is operated with the parking brake engaged, serious damage may result.
11. Pick a level area to do your Shredding. Be sure your work area is free of holes, rocks or other debris so that you will not stumble or fall, when operating your shredder attachment. Serious injury could occur should you stumble or fall into any moving parts, rocks or other debris.

OPERATION

12. Do not attempt to change the governor setting or overspeed the engine. The governor controls the engine speed and protects the engine from damaging, excessive speeds. Excessive engine speeds are dangerous.
13. Never place your hands or feet in or under the Tractor Shredder attachment, in the discharge chute or near any moving parts while the tractor or Tractor Shredder are running. Always keep clear of the discharge chute. Keep deflector angled downward, as this limits the uncontrolled explusion of Shredded material from the unit at high speed.
14. Keep your face and body back from the hopper opening in order to avoid any bounceback of material from the hopper.

15. Do not overload the hopper of this Tractor Shredder. If it becomes necessary to push material into the hopper, use only a 3-foot long piece of soft wood such as plastering lath, or sticks approximately ¾" in diameter. Never use your hands, large pieces of wood, thick plastic material or the like.
16. Do not allow an accumulation of shredded material in the discharge area as this will prevent proper discharge.
17. If your tractor or Tractor Shredder attachment should inadvertently strike a foreign object, immediately place the blade control lever in the disengaged position, shut off the engine, make absolutely sure the blades and all moving parts have completely stopped, remove the ignition key, disconnect the spark plug wire from the spark plug(s) and keep the wire away from the plug(s) to prevent injury or accidental starting, then thoroughly inspect the tractor and Tractor Shredder attachment for any damage. Such damage must be repaired before restarting and operating the tractor and Tractor Shredder attachment.
18. If the tractor or Tractor Shredder attachment should start to vibrate abnormally, place the blade control lever in the disengaged position, shut off the engine, make absolutely sure the blades and all moving parts have completely stopped, remove the ignition key, disconnect the spark plug wire from the spark plug(s) and keep it away from the plug(s) to prevent injury or accidental starting, then check immediately for the cause of this vibration as vibration is generally a warning of trouble.
19. Before clearing the discharge chute, adjusting, cleaning, repairing, or inspecting your tractor or Tractor Shredder attachment, place the blade control lever in the disengaged position, shut off the engine, make absolutely sure the blade(s) and all moving parts have completely stopped, remove the ignition key, disconnect the spark plug wire from the spark plug(s) and keep it away from the spark plug(s) to prevent injury or accidental starting.
20. Do not run the engine indoors because the engine exhaust fumes contain carbon monoxide which is a tasteless, odorless, deadly poison.
21. Do not start or stop suddenly when going up or down a terrace, slope or incline. If it is necessary to stop your tractor upon an incline, do so firmly to prevent the tractor from picking up speed during declutching and before reaching the brake position. Do not shift gears while going up or down inclines. Choose a gear low enough to negotiate the incline without stopping and shifting gears. To reduce the speed of the tractor on an incline move throttle lever to slow.
22. Never attempt to operate your tractor or Tractor Shredder attachment without the proper shields, guards, plates or other protective devices in place and fully functioning.
23. Be absolutely sure that the discharge deflector is used at all times when the Tractor Shredder attachment is operating in order to minimize the possibility of injury or damage from a thrown object.
24. Before and while attempting to back up, look carefully to be absolutely sure that children, bystanders, pets, foreign objects or obstacles of any kind are not behind you.
25. Never direct shredded material from the discharge chute toward bystanders or pets nor allow anyone near the tractor while it is operating.
26. Be ready to start shredding before you start the engine of your tractor. Shift tractor into neutral, set parking brake, before engaging blade control lever. The use of any precision piece of power equipment requires your full concentration and attention to the job being done in order to prevent injury or damage.

MAINTENANCE

27. Keep all nuts, bolts and screws tight in order to be sure that the tractor and Shredder attachment are in safe working condition. Be sure the brake and Shredder attachment controls are always in proper adjustment and repair. Check the blade and engine mounting bolts at frequent intervals for proper tightness. Before performing any maintenance, always place the blade control lever in the disengaged position, set the parking brake, shift into neutral, shut off the engine, make absolutely sure the blades and all moving parts have completely stopped, remove the ignition key, disconnect the spark plug wire from the spark plug(s) and keep it away from the plug(s) to prevent injury or accidental starting.
28. Keep the engine free from accumulations of grass, leaves or excessive grease as these accumulations are combustible and could result in a fire. Always keep your tractor and Tractor Shredder attachment in good operating condition and make sure that all shields, guards, plates and other protective devices are in place. Give your tractor and Tractor Shredder attachment the regular maintenance they need and have a competent serviceman make a thorough inspection of the tractor and Shredder attachment at least once a year.
29. Do not store your tractor for prolonged periods (more than 30 days) with gasoline in the tank. Do not store your tractor or a gasoline container inside a building where fumes may reach an open flame or spark, they should be stored in a cool, dry place. Be sure to let the engine cool before storing in any enclosure. Always use a approved gasoline container for storing gasoline and keep your tractor, Shredder attachment and gasoline container in locked storage to prevent children from playing and tampering with them.

Introduction

Your new Sears Tractor Shredder Attachment utilizes 3 sharp, cutting blades rotating about the vertical shaft within the blade housing. In order to shred material fast and efficiently, the tip of the blades rotate at a speed of approximately 12,600 feet per minute or almost 143 miles per hour when the attachment clutch lever is in the engaged position. The blades cut material through the use of such force coupled with the sharpness and speed of the blades. Obviously, such a force constitutes a potential danger if the Shredder is not properly used and maintained. It is therefore, imperative in its use and maintenance that the operator always follow the normal precautions stated in the RULES FOR SAFE OPERATION as well as other instructions contained in the Owners Manual in order to prevent injury or damage.

This Shredder Attachment has been designed, engineered and manufactured to give you the best dependability and performance. Should you experience any problem which cannot be easily remedied, please return your Shredder to your nearest Sears, Roebuck and Co. store or service center. They have well qualified, competent, trained technicians and proper tools to service or repair this unit. NEVER ATTEMPT TO SERVICE OR REPAIR YOUR SHREDDER UNLESS YOU ARE FULLY QUALIFIED TO DO SO.

The Tractor Shredder Attachment has been shipped from the factory partially assembled. All parts such as bolts, nuts, washers, etc. necessary to complete assembly of the Tractor Shredder Attachment have been included in a plastic bag.

Bag of parts include the following items:

1 spring	8 lockwashers
1 shorting wire	1 flat washer
2 slotted truss hd. screws	9 hex nuts
1 carriage bolt	1 self stripping tap connector
6 hex bolts	1 plastic tie

table of contents

assembly

A letter in parenthesis in the following instructions refers to an arrow in an adjoining Figure (Illustration), unless otherwise stated. When R.H. (Right Hand) or L.H. (Left Hand) is used, it should be understood to mean from a position standing at the tractor mounting end and facing the Tractor Shredder. Refer to Fig. 1.

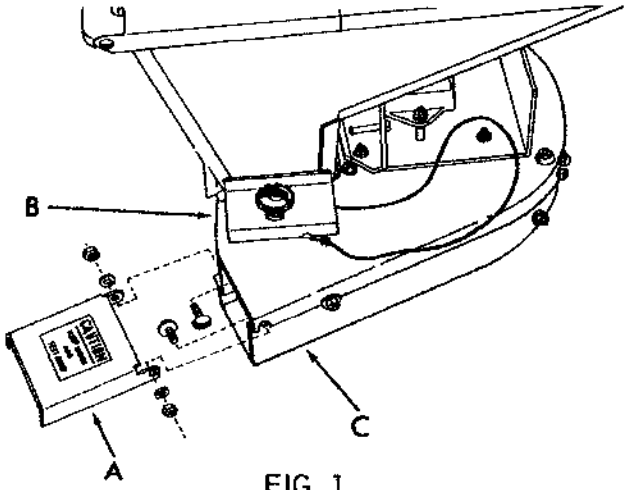

FIG. 1

1. After opening carton, remove Tractor Shredder. All hardware; bolts, nuts, washers, spring and wire which are referred to in the following instructions were shipped in a plastic bag. Separate all bolts, washers, etc., according to size. Lay out all parts for assembly.
2. Remove wire, holding brake assembly to inside support channel and weld pins (D) Fig. 2.
3. Refer to Fig. 1. Assemble deflector (A) to engine pad (B) and mill housing (C) with 2-3/8 x 3/4 truss hd. machine screws, lockwashers and hex nuts. NOTE: Head of bolts to inside. Bolts, washers, and hex nuts will be found in plastic bag. Deflector (A) must be positioned to deflect shredded material downward. Tighten both nuts securely.

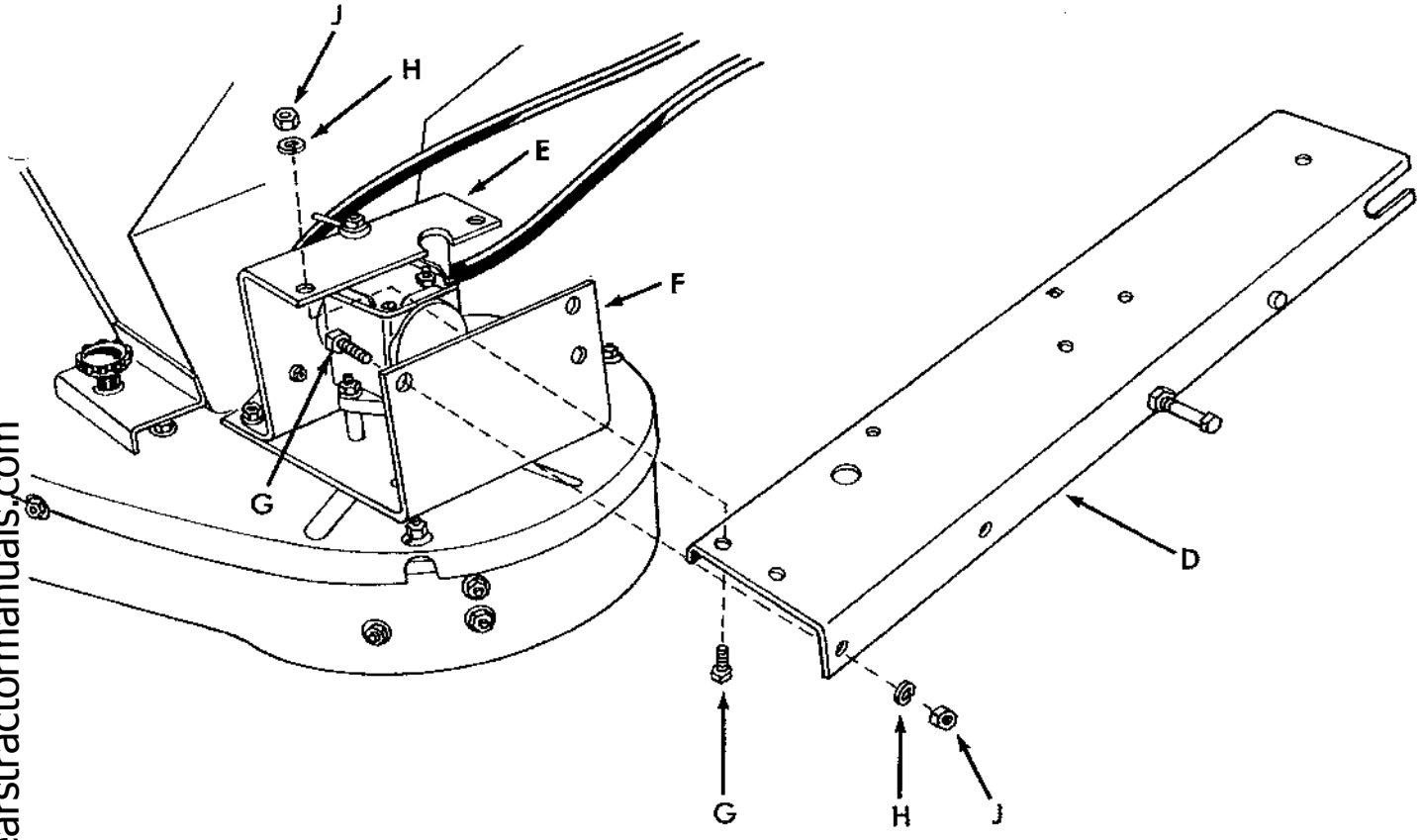

FIG. 2

Refer to Fig. 2. Assemble support channel and weld pins (D) to hanger bracket R.H. (E), and hanger bracket L.H. (F). Use 4-3/8 x 7/8 hex hd. bolts (G), 3/8 lockwashers (H), and 3/8 hex nuts (J), found in plastic bag for assembly. Tighten all 4 bolts securely.

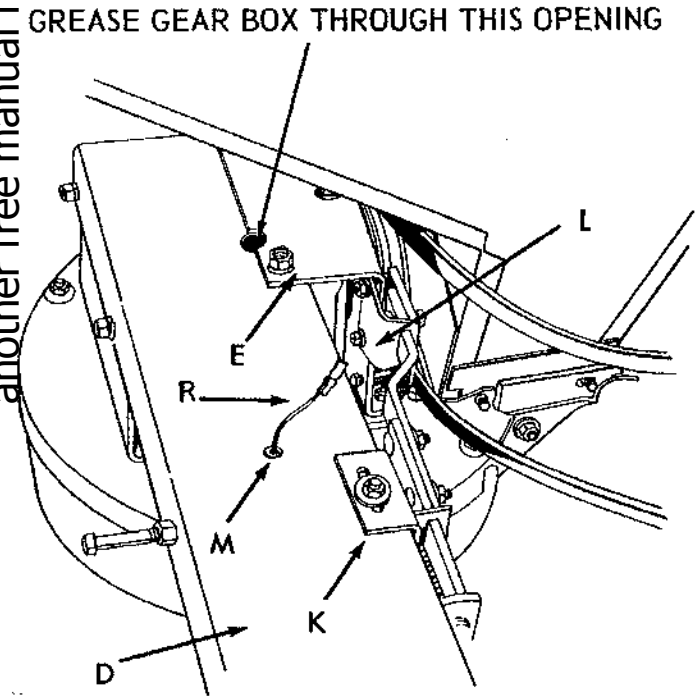

FIG. 3

5. Refer to Fig. 3. Place brake bar bracket-rear (K) on top of support channel and weld pins (D) as shown.
6. Assemble brake bar bracket-front (L) to hanger bracket R.H. (E), using 2-1/4 x 5/8 hex bolts, ¼ lockwashers, and ¼ hex nuts found in plastic bag. Tighten both bolts securely.
7. Secure brake bar bracket-rear (K) to top of support channel and weld pins (D) with 1-5/16 x 3/4 carriage bolt, 3/8 x 7/8 flat washer, and 5/16 hex nut. Bolt, washer, and nut will be found in plastic bag. Tighten nut finger tight only at this time. See page 9 for adjustment of brake.
8. Thread shorting wire-front (R), and rubber grommet (M) up through hole in mounting channel (D). Make sure rubber grommet (M) is in mounting channel (D) properly as shown in Fig. 3.

assembly (cont.)

assembly of shredder to tractor

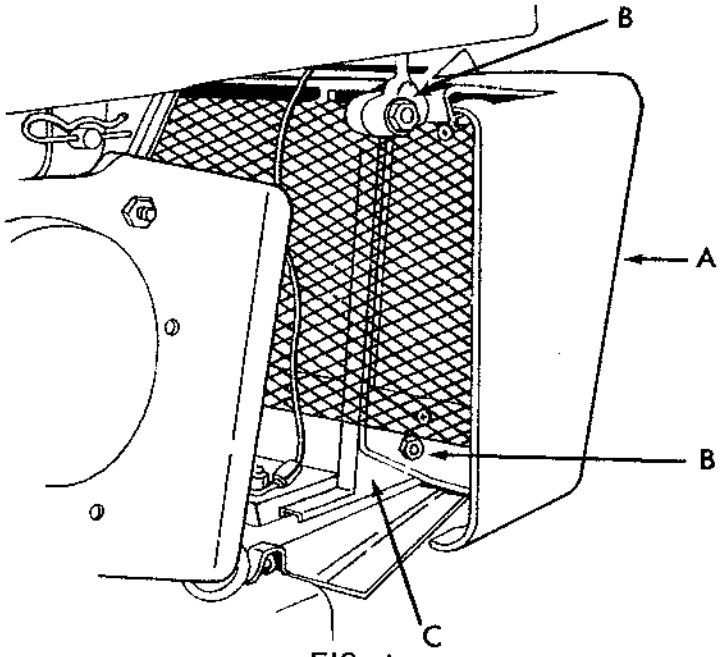

FIG. 4

1. Refer to Fig. 4. Remove R.H. grill side (A) by removing two bolts (B) holding grill side to grill (C). Keep grill side and bolts so that they can be replaced when Shredder is removed.

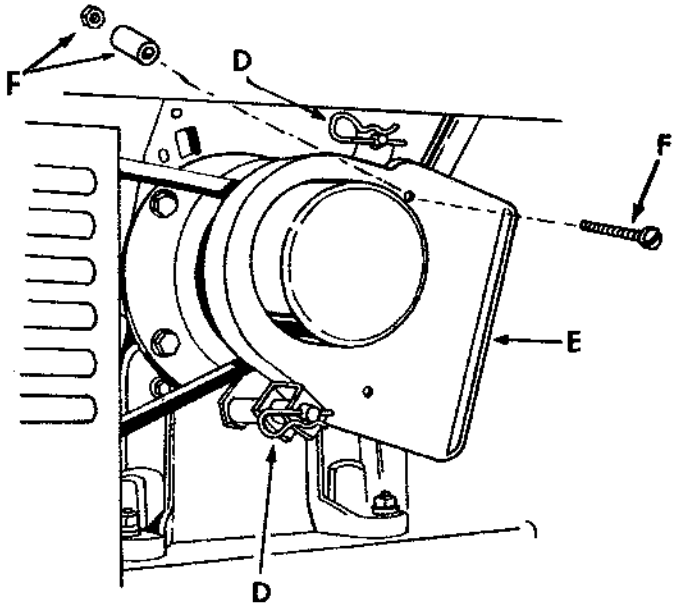

FIG. 5

2. Refer to Fig. 5, (only on 1968 & newer models). Pull the 2 retainer springs (D) holding belt guard (E) to tractor. Remove belt guard (E). Remove bolt, bushing and nut (F) from belt guard (E). (Keep for use with mower).

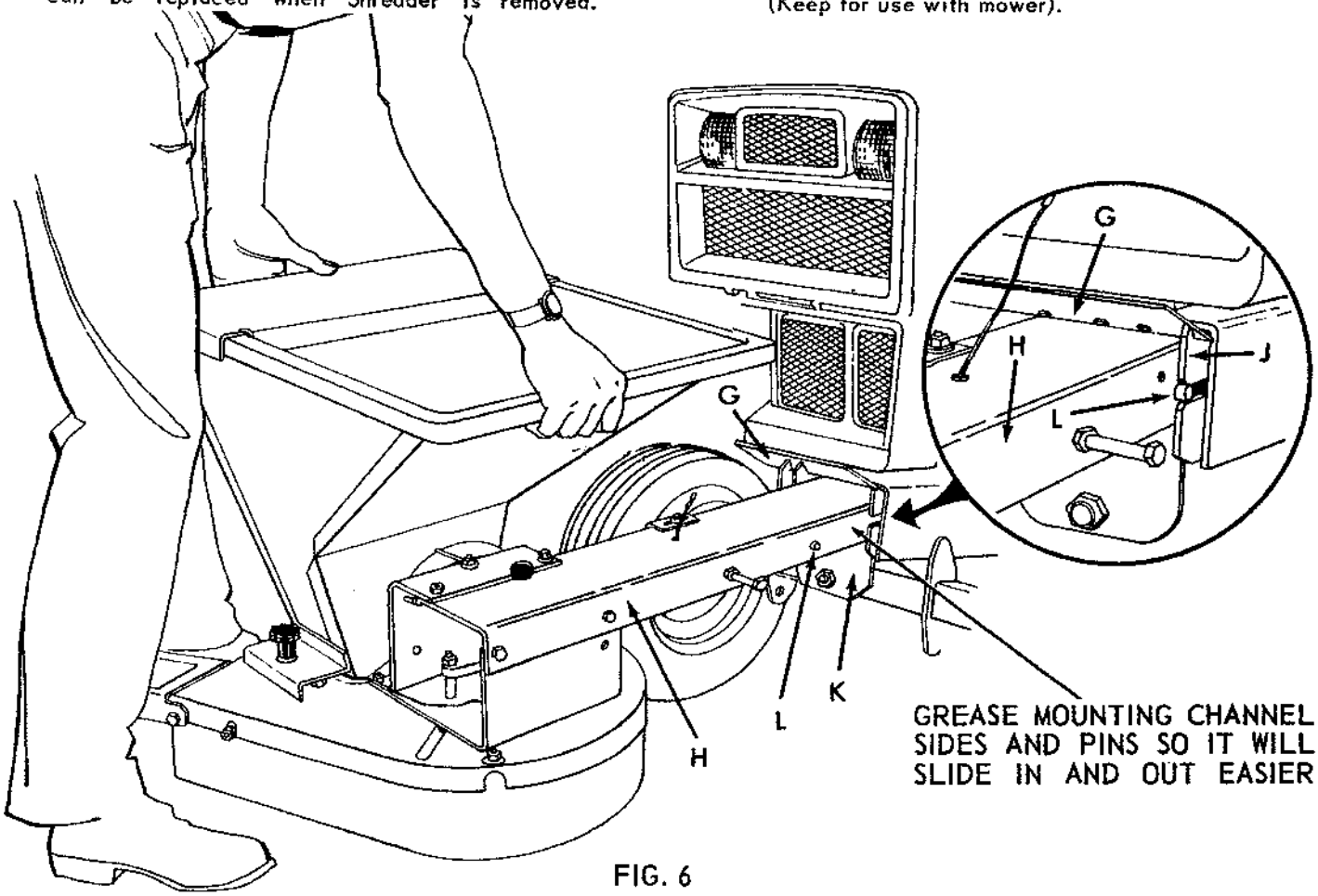

FIG. 6

3. Raise front channel cover (G). Slide mounting channel (H), into front frame (J), of tractor as shown. NOTE: Rear end of mounting channel (H), can be placed on top of front axle bracket (K), then be pushed back into place. Be sure pins (L), on mounting channel (H), enter slots in tractor frame as shown.

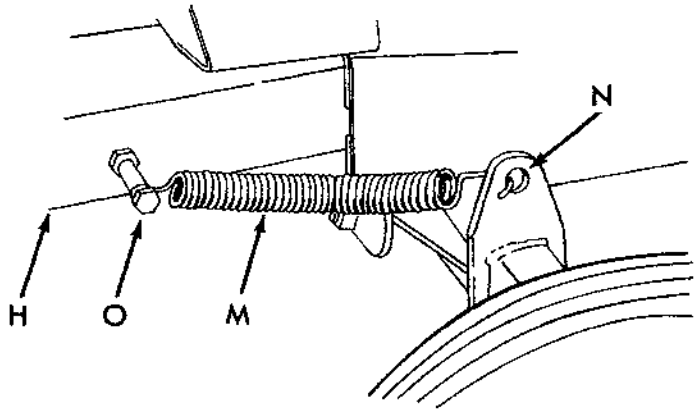

FIG. 7

4. Refer to Fig. 7. Hook spring (M) from hole in L.H. upper front axle bracket (N) to bolt (O) on L.H. side of mounting channel (H) as shown.

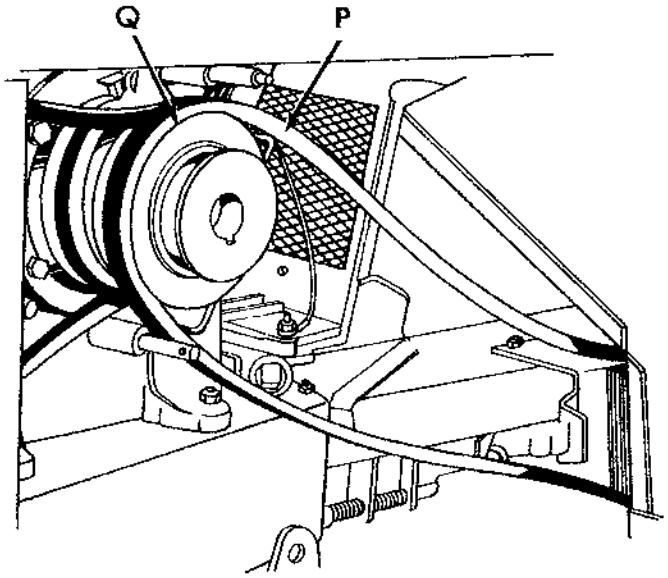

FIG. 8

5. Refer to Fig. 8. Place drive belt (P) in largest groove of engine pulley (Q) (second groove from outside).

6. Replace belt guard removed in step 2 Page 5 and secure with two retainer springs. See Fig. 5.

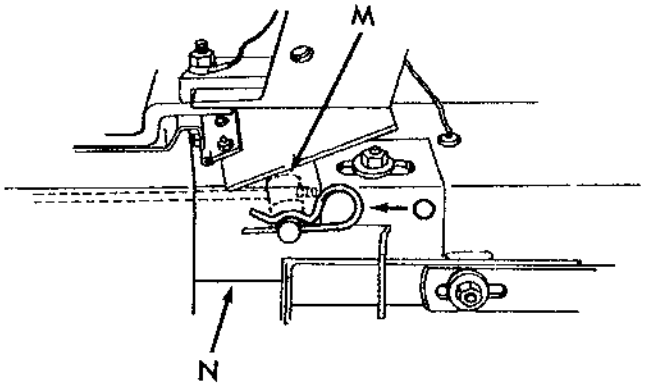

FIG. 9

7. Using the belt tightener link 6499H and adjusting pin (M) 6501H from rotary mower attach to support channel (N) with spring retainer (O).

8. Adjust brake see Brake Adjustment page 9.

For safety switch hook up

For 16H.P. twin cylinder engine

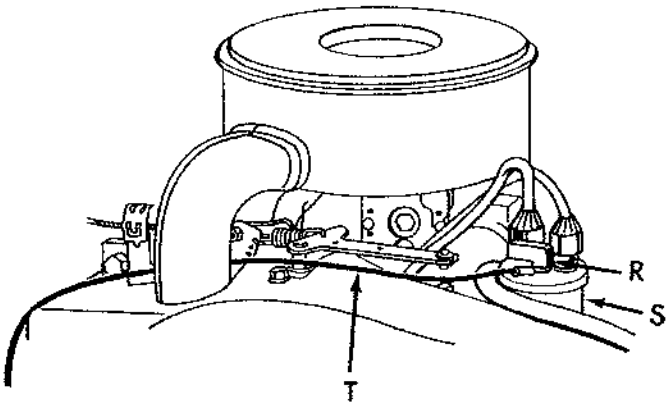

FIG. 10

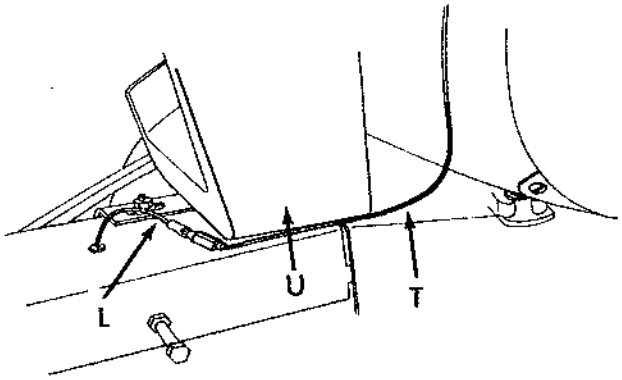

FIG. 11

9. For 16 HP Twin Cylinder engine lift up on terminal (R) to remove from coil (Figure 10). Place wire terminal eyelet (T) (wire found in plastic bag) on stud of coil. Now replace terminal (R) on coil stud.

10. Lay wire (T), on top of engine near fan housing and down in front of engine, under grill and connect to wire (L).

assembly (cont.)

For 12H.P. and 16H.P. single cylinder engines

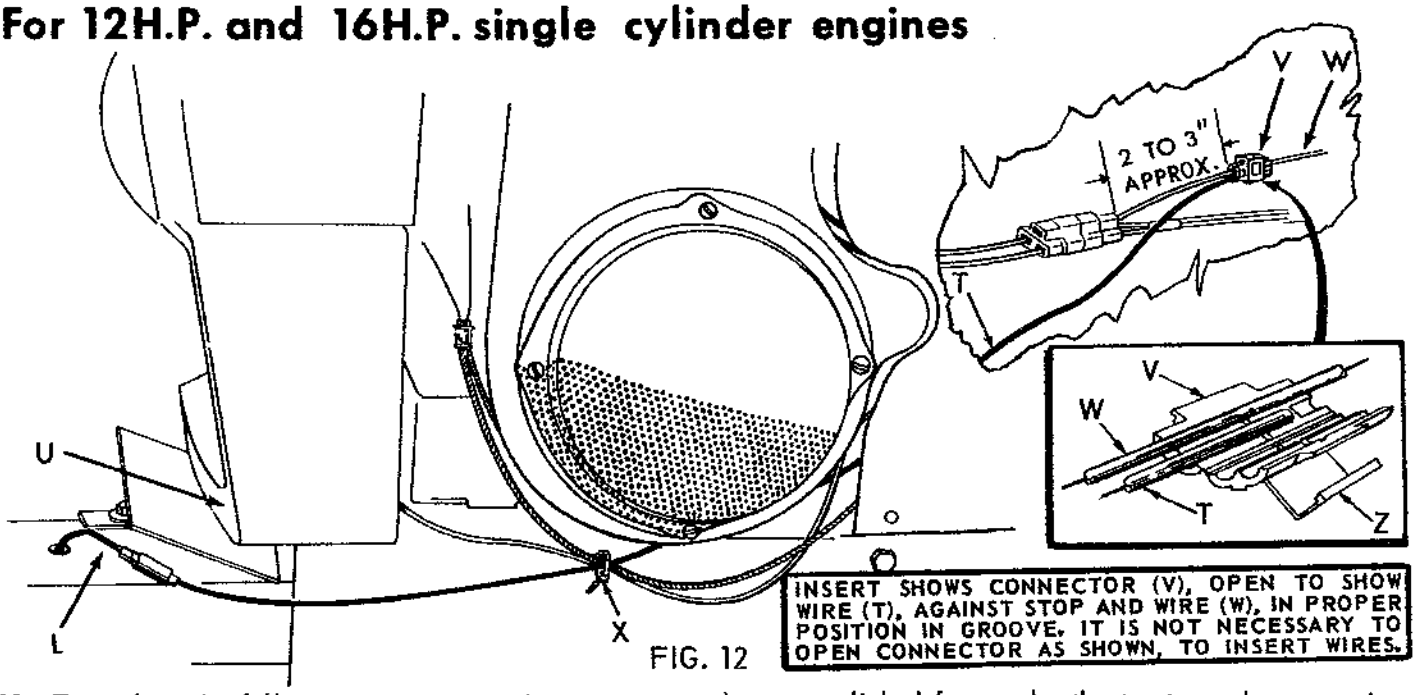

FIG. 12

11. To perform the following step, connection access may be accomplished from under the tractor or by removing right-hand cover located directly below the battery.
12. For 12 and 16 HP single cylinder engines: Cut off wire (T) (found in plastic bag) and terminal eyelet approximately 6" from end of eyelet. Place connector (V) over single wire (W) inserting wire into first groove from open side of connector as illustrated above. Insert cut off end of wire (T) into open end of connector (V). Make sure wire touches the stop in connector. Use pliers to squeeze metal plunger flush with body of connector, then fold tab (Z) over and lock on body of connector.
13. Run wire (T), under flywheel housing of engine and under grill (U), connect wire (T) to wire (L).
14. Use tie (X) provided in plastic bag and attach rear wire to throttle cable.

For 1972 and older tractors

BRIGGS & STRATTON ENGINE

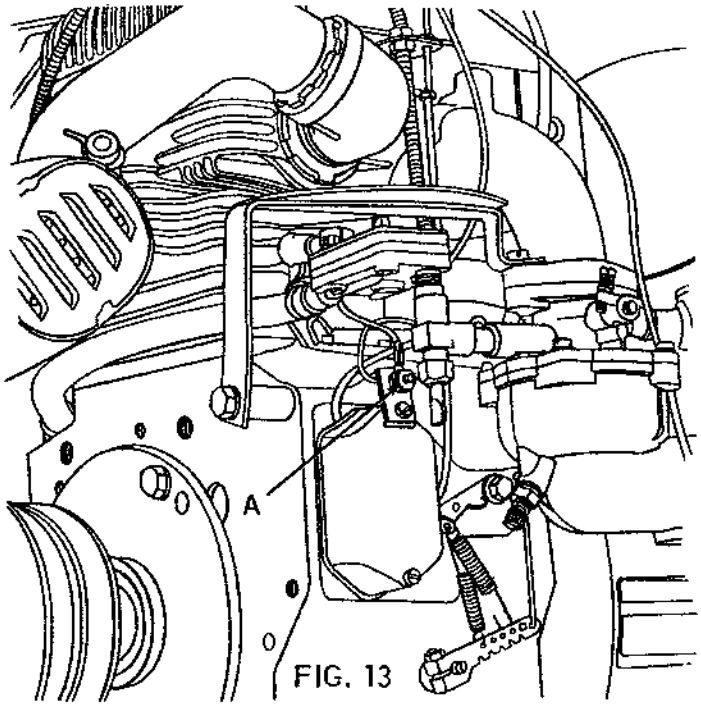

FIG. 13

1. Attach eyelet of shorting wire from shredder attachment to terminal (A) on Briggs engine. To breaker box as shown above. See (Fig. 13).

CRAFTSMAN ENGINE

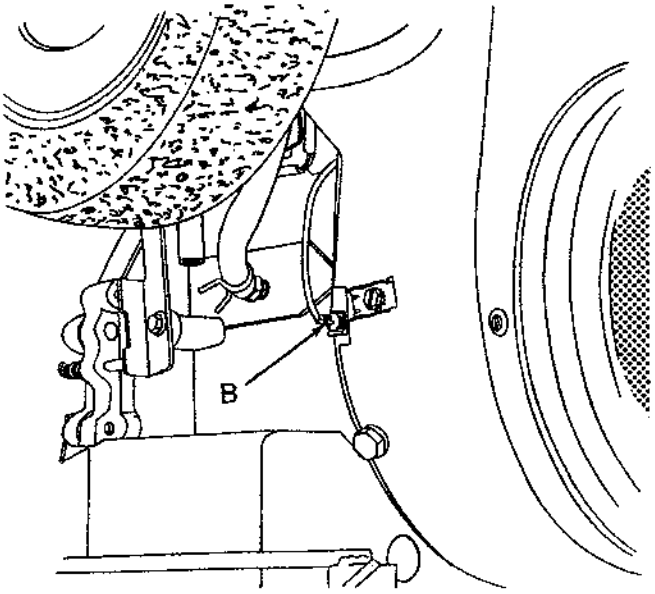

FIG. 14

1. Attach eyelet of shorting wire from shredder attachment to terminal (B) on Craftsman engine. Front of blower housing as shown above. See (Fig. 14).

preface to operating

There are several gardening applications for your powerful new TRACTOR SHREDDER. Probably your initial use of this unit will be to reduce lawn and garden bulk by shredding it and bagging it for disposal pick-up. Air pollution ordinances in many areas have made it illegal to burn this bulk, however your TRACTOR SHREDDER will allow you to dispose of it properly.

Another prime use for your TRACTOR SHREDDER will be in the preparation of a compost pile. Shredding accelerates the decomposition process. Compost is of special value for potting house plants, use in greenhouses, gardens and the like . Some other uses are for flower beds, rose beds, and as a top dressing for lawns. The ingredients which go into the preparation of a compost pile vary depending upon the materials available, but they usually consist of sod, grass clippings, weeds, leaves, corn stalk, discarded vegetable greens such as carrot tops, etc .Many local libraries have fine books on gardening and flower bed preparation and maintenance dealing with the preparation of compost piles which will apply to your particular climate, soil conditions and use for the compost pile .

In order to make your TRACTOR SHREDDER a more versatile piece of equipment, Sears offers the following accessories:

1. Lawn Cleanup Cart
2. Leaf Ramp
3. Extra-heavy Plastic Bags
4. Bagging attachment

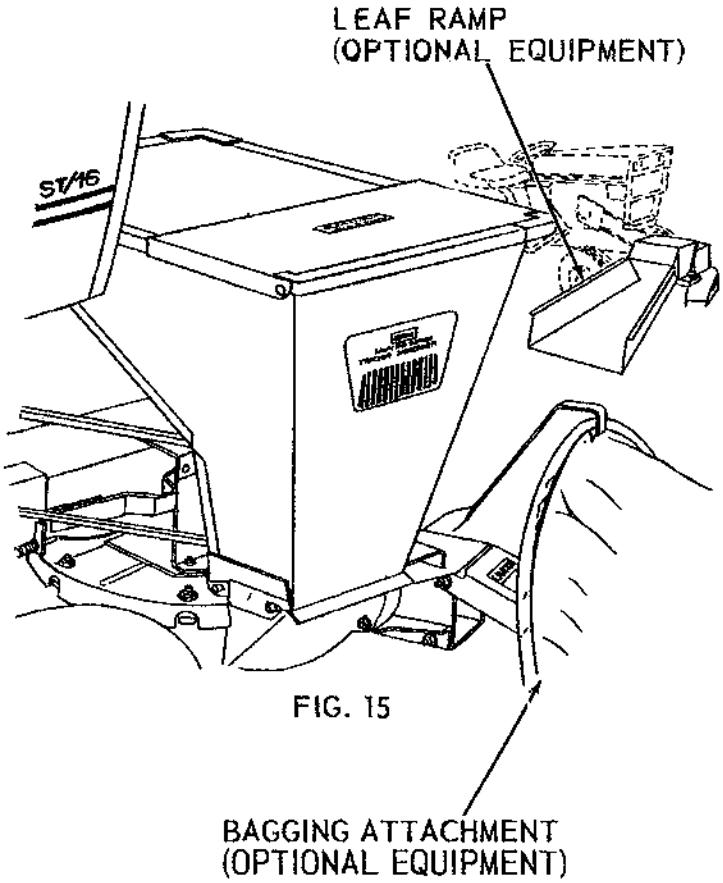

FIG. 15

operating instructions

1. Position tractor, with TRACTOR SHREDDER ATTACHMENT on level ground, away fron any debris such as rocks, cans, stumps etc. This is to give you a clear area in which to work.
2. Set parking brake on tractor and start tractor engine (half throttle). Engage clutch attachment lever on tractor to engage SHREDDER ATTACHMENT.
3. After SHREDDER ATTACHMENT is running, advance throttle on tractor to "Fast" position (full throttle).
4. To stop shredder reduce throttle on tractor to about half throttle, then pull back (disengage) clutch attachment lever all the way against foot rest. Hold down on lever until brake stops drive sheave on gear box. Turn ignition on tractor to "off" position .

TRACTOR SHREDDER was designed for best operation at full "fast" throttle. Keep guard, at top, front end of hopper in the closed position at all times. Be sure discharge chute deflector is angled downward so that all shredded material is diverted to discharge toward the ground.

Stalks, long heavy weeds, small branches, etc. can be hand fed into the hopper. This way the rate of feed can be controlled to prevent stalling the engine However, when this material becomes so short as to be level with the top of hopper, let go, and material will feed itself. DO NOT lower hands inside the hopper.

If it becomes necessary to push material down in hopper, use only a 3-foot long piece of soft wood. A plastering lath, or ¾" diameter stick are good examples of what to use. Occasionally there may be a bounce back of material from blades, therefore keep face away from hopper opening.

When feeding material into hopper, always feed so that (throat) bottom of hopper is not completely covered. This is necessary so that air will mix with material for proper discharge. More material can be shredded when hopper is not completely filled. If fed too fast engine may stall. It will take experience to determine the proper rate of each material fed into the Shredder for best performance.
It is not necessary to shred all material to a uniform size. Remember, the main purpose of the Shredder is to reduce the bulk.

IMPORTANT: When shredding materials with high moisture content, which may have a tendency to plug, mix in some dry material such as corn cobs, brush trimmings, etc. The percentage of dry material added will vary with moisture content and condition of material to be shredded. Generally more dry material will be needed with higher moisture material. A continuous mixture will also help. Experience will teach you the proper mixtures and rate of feed needed to prevent plugging.

When shredded material builds up at discharge area, disengage clutch attachment lever, and stop tractor engine. Rake material away from discharge area. Restart tractor engine, and engage clutch attachment lever.

maintenance

flow of material obstructed

1. Move tractor throttle lever to slow position. Disengage tractor clutch attachment lever all the way against foot rest.
2. Turn ignition switch to "off" position on tractor.
3. Remove the hopper, see below.
4. Use a stick or small board to clean out mill housing and discharge area.
5. Replace hopper.
6. Restart tractor engine and engage clutch attachment lever.

hopper removal

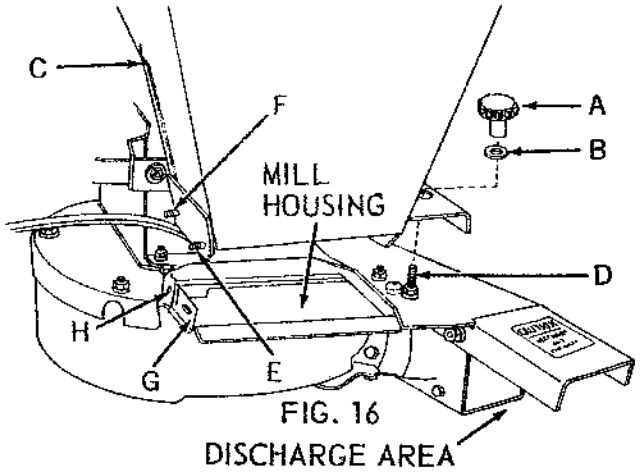

FIG. 16

1. Disengage clutch attachment lever all the way against foot rest, and stop tractor engine. Remove key so that tractor cannot be started.
2. Unscrew, and remove hopper hold down knob (A), and washer (B).
3. Lift and tilt hopper (C) to the right so that hopper clears bolt (D). Now pull hopper (C) to the left to disengage weld pins (E and F) from holes (G and H), in engine pad and heavy breaker.

hopper reassembly

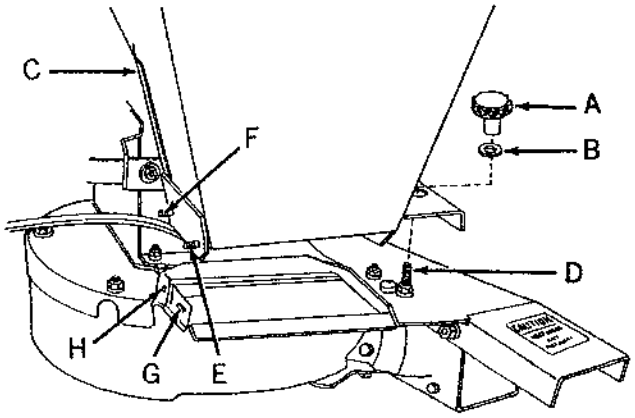

FIG. 17

1. Lift and tilt hopper (C), into position as shown in Fig. 16. Insert weld pin (F), into round hole (H), of engine pad. Pivot hopper until weld pin (E) enters slot (G), of housing breaker.
2. Lower hopper until hole in lower left hand side of hopper engages bolt (D). Secure in place with flat washer, and hold down knob (B).

brake adjustment

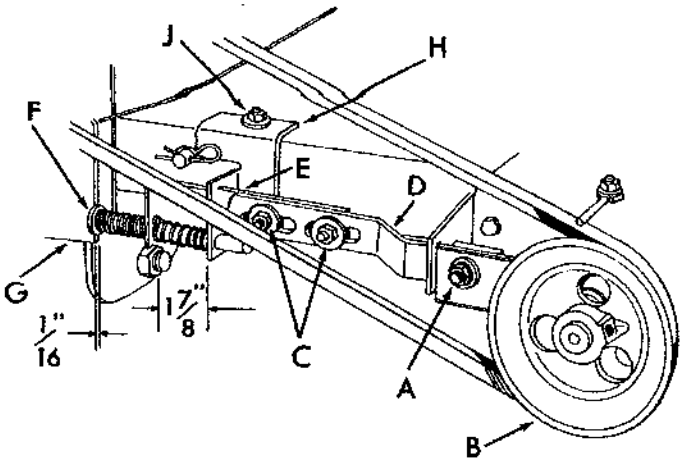

FIG. 18

The purpose of the brake is to stop the blades quickly. With Shredder clutch lever engaged (lever pushed all the way forward) be sure brake shoe (A) is tight against groove in sheave (B). Then loosen bolts (C) in brake bar from (D) and brake bar weldment-rear (E). Adjust brake bars so that push rod (F) clears front of tractor frame (G) by 1/16". Retighten nuts securely. Adjust brake bar bracket-rear (H) so that front spring is compressed to about 1 7/8" long. Tighten nut (J) securely.

Disengage clutch, start engine, and engage and disengage attachment clutch lever several times to make sure brake is stopping blades properly. If it does not, lengthen brake bars front (D) and rear (E) and tighten nuts (C) securely.
NOTE: Brake shoe (A) must not rub sheave (B) when Shredder is running (clutch engaged).

belt adjustment

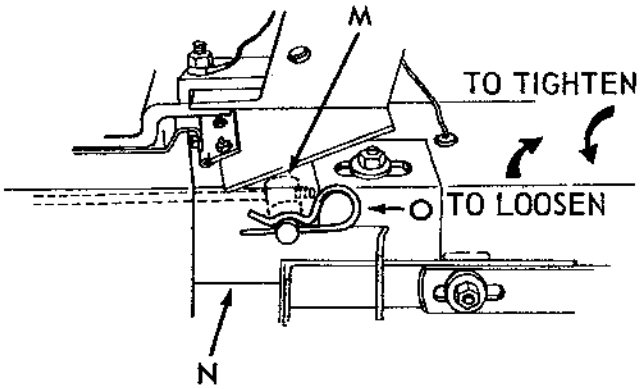

FIG. 19

Remove retainer spring (O), from adjusting pin (M). Remove adjusting pin (M), from support channel (N). Turn adjusting pin (M), clockwise to loosen belt; counterclockwise to tighten belt. Replace adjusting pin (M), in hole of support channel (N). Engage clutch lever (push forward). Squeeze belt with thumb and fore finger midway between engine pulley and Shredder pulley. Belt is properly adjusted when there is a 3" space between belt when squeezed (without undue pressure). Replace retainer spring (O), in adjusting pin (M). After two (2) hours use, recheck belt for adjustment.

maintenance (cont.)

lubrication

Lubricate gear box once a season. To grease remove hopper, place nozzle of grease gun through hole in top of front end of support channel and weld pins. Pump ten (10) shots of moly E.P. lithium grease through grease fitting into gear box. Replace hopper, and tighten hold down knob securely. Refer to Fig. 3, Page 4.

service instructions

The torque of the mandrel nut is VERY CRITICAL. If nut is tightened too tight, clutch will not slip and should some foreign object enter the mill housing, extensive damage could occur to the mandrel, blades and gear box.

It is probable that the blades will never need sharpening. We STRONGLY RECOMMEND that should any repairs or adjustment be required to the mandrel, blades or gear box (requiring removal of the mandrel nut), that the shredder attachment be returned to your Sears store or service center for inspection and service.

Certain normal owner maintenance must be performed to obtain longest life and trouble free use of your shredder. Servicing of the air cleaner on tractor regularly is of the utmost importance, especially when shredding dry material.

how to clean

When you are through operating the Shredder for the day, flush out the residue that has collected inside the machine. Run some water into the hopper with a garden hose while the blades are running at "slow" speed. CAUTION: Do NOT place hose inside the hopper. Avoid getting water on tractor engine. Run shredder again so that air flow will dry out mill housing. Clean the engine, refer to tractor manual.

removal of unit from tractor

Disconnect spring (Fig. 7, page 6), shorting wire at connector (Fig. 11, page 6), belt tightener link (Fig. 9 page 6), and belt at engine pulley (Fig. 8 page 6). Reverse steps 3, 2 and 1 page 5.

storage

In the event your Shredder is to be inoperative for periods in excess of 30 days--prepare for storage as outlined below:

1. Completely clean inside, and outside of Shredder, after each time it is used. It is easier to clean then, and will work more efficiently next time it is used.
2. Apply a light coat of grease or rust preventive to hopper, blades and inside walls of mill housing.
3. Store in a clean, dry building.

TRACTOR SHREDDER ATTACHMENT
MODEL NUMBER 917.253430

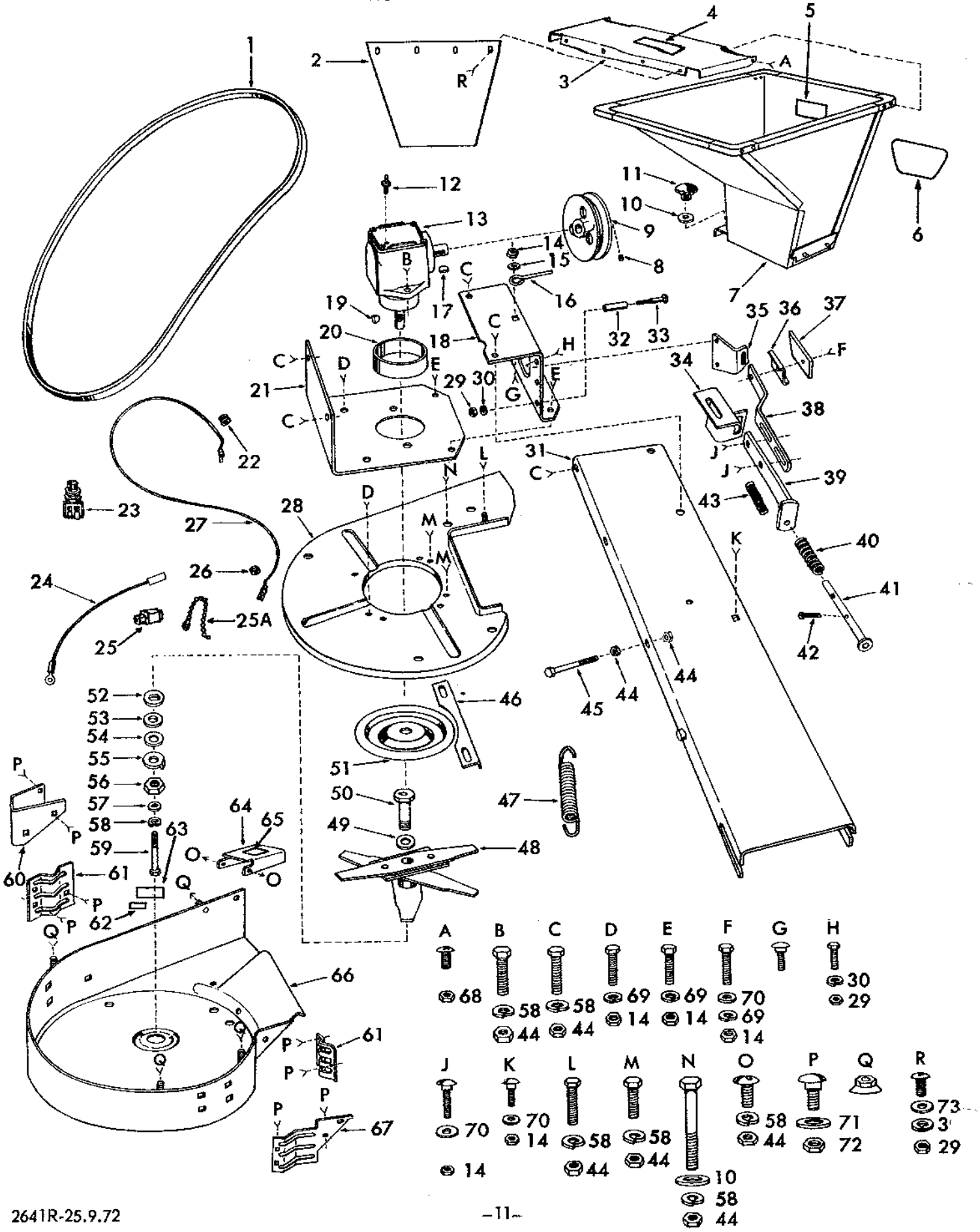

repair parts

TRACTOR SHREDDER ATTACHMENT
MODEL NUMBER 917.253430

KEY NO.	PART NO.	DESCRIPTION
1	3541R	V-Belt
2	2980R	Rubber Deflector
3	3308R	Guard
4	3440R	Scotchcal (Caution)
5	3439R	Scotchcal (Caution)
6	2636R	Scotchcal (Name Plate)
7	658A11	Hopper
8	4523P	Hex Socket Hd. Set Screw Serr. C.P. 5/16 - 24 x 3/8
9	4689H1	Sheave
10	1557P	Washer 13/32 x 13/16 x 11 Ga.
11	1417R	Hold Down Knob
12	2707R	Safety Vent Grease Fitting
13	794114	Right Angle Gear Box
14	504P	Hex Nut 5/16 - 18
15	1537P	Washer 11/32 x 11/16 x 16 Ga.
16	2627R	Belt Guide
17	2228M	Woodruff Key 3/16 x ¾
18	2625R	Hanger Brkt. R.H.
19	4919H	Woodruff Key 5/32 x 5/8 H. T.
20	2619R	Gear Box Spacer
21	2624R	Hanger Brkt. L.H.
22	3425R	Grommet (For Engine Pad)
23	2520R	Safety Switch
24	2633R	Shorting Wire-Rear
25	2711R	Self Stripping Tap Connector
25A	2777R	Plastic Tie
26	2634R	Grommet (In Support Channel)
27	2632R	Shorting Wire-Front
28	658A55	Engine Pad Assembly
29	503P	Hex Nut ¼ - 20
30	1002P	Lockwasher ¼
31	634A506	Support Channel & Weld Pins
32	2628R	Split Spacer
33	3266P	Hex Bolt ¼ - 20 x 1¾
34	2622R	Brake Bar Brkt-Rear
35	2621R	Brake Bar Brkt-Front
36	2620R	Brake Shoe Holder
37	2629R	Brake Shoe
38	2617R	Brake Bar-Front
39	634A504	Brake Bar Weldment- Rear
40	2877H	Spring
41	2626R	Push Rod
42	2505P	Cotter 1/8 x ¾
43	2876H	Spring
44	501P	Hex Nut 3/8 - 16
45	3031P	Hex Bolt 3/8 - 16 x 2½
46	2052R	Breaker Angle
47	5105H	Spring
48	658A30	Blade Weldment
49	1521R	Wear Washer
50	1376R	Mandrel
51	2611R	Seal Protector
52	2941R	Drive Washer
53	2942R	Rubber Washer
54	1423R	Compression Washer
55	1482R	Nut Lock Plate
56	1380R	Nut
57	1404R	Mandrel Washer
58	1004P	Lockwasher 3/8
59	3246P	Hex Bolt 3/8 - 24 x 2¼ H.T.
60	1401R	Discharge Separator
61	1402R	Breaker
62	1415R	Decal (Patent Pending)
63	2637R	Model Plate
64	1399R	Deflector
65	3437R	Scotchcal (Caution)
66	634A505	Mill Housing Assembly
67	1382R	Heavy Breaker
68	1605H	Locknut ¼ - 20
69	1003P	Lockwasher 5/16
70	1511P	Washer 3/8 x 7/8 x 14 Ga.
71	1513P	Washer 13/32 x 13/16 x 16 Ga.
72	5394H	Locknut 3/8 - 16
73	1506P	Washer 9/32 x 5/8 x 16 Ga.
A	3253P	Pan Hd. Phillips Screw ¼ - 20 x ½
B	3031P	Hex Bolt 3/8 - 16 x 2½
C	3022P	Hex Bolt 3/8 - 16 x 7/8
D	3010P	Hex Bolt 5/16 - 18 x ¾
E	3011P	Hex Bolt 5/16 - 18 x 1
F	3011P	Hex Bolt 5/16 - 18 x 1
G	16P	Carriage Bolt 5/16 - 18 x ¾
H	3115P	Hex Bolt ¼ - 20 x 5/8
J	17P	Carriage Bolt 5/16 - 18 x 1
K	16P	Carriage Bolt 5/16 - 18 x ¾
L	3252P	Hex Bolt 3/8 - 16 x 1½ Full Thread
M	3021P	Hex Bolt 3/8 - 16 x ¾
N	3251P	Hex Bolt 3/8 - 16 x 5
O	3242P	Truss Hd. Slotted Mach. Screw 3/8 - 16 x ¾
P	19P	Carriage Bolt 3/8 - 16 x ¾
Q	1421R	Whiz Lock Nut
R	3253P	Pan Hd. Phillips Screw ¼ - 20 x ½
---	2641R	Owners Manual

TRACTOR SHREDDER ATTACHMENT

MODEL NUMBER 917.253430

A-1443
Model No. 2645-P91
Service No. 794114

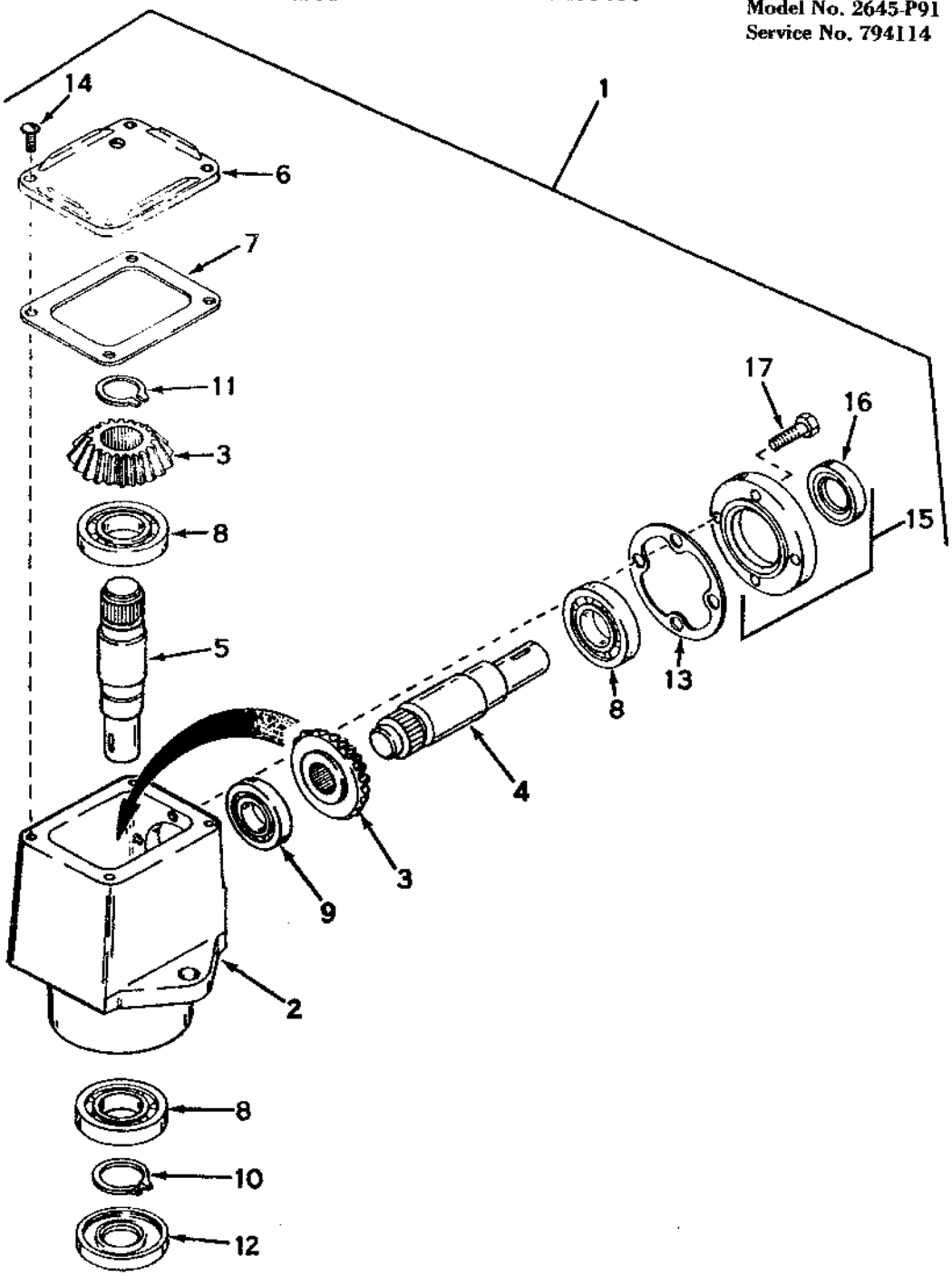

KEY NO.	PART NO.	DESCRIPTION
1	794114	Head Assy., Left Hand (Incl. Nos. 2 thru 15)
2	770026	Housing, Right Angle Drive
3	778046	Gear, Miter
4	776150	Shaft, Input
5	776151	Shaft, Output
6	772067	Cover
7	788028	Gasket, Cover
8	780034	Bearing, Ball
9	780024	Bearing, Ball
10	788019	Ring, Snap
11	792018	Ring, Snap
12	788029	Seal, Oil
13	788030	Gasket, Cap
14	792025	Screw, Rd. Hd. Self Tap, 10-24 x 1/2
15	786029	Cap & Seal Assy., Retainer (Incl. Nos. 16 & 17)
16	788031	Seal, Oil
17	792026	Screw, Hex Hd. 1/4-20 x 7/8

notes

634x130

Sears

owners manual

SEARS SERVICE
IS AT YOUR SERVICE
WHEREVER YOU LIVE
OR MOVE
IN THE U.S.A.

The Model Number will be found on a plate attached to the Mill Housing. Always mention the Model Number when requesting service or repair parts for your TRACTOR SHREDDER ATTACHMENT.

All parts listed herein may be ordered through SEARS, ROEBUCK AND CO. or SIMPSONS-SEARS LIMITED. When ordering parts by mail, selling prices will be furnished on request or parts will be shipped at prevailing prices and will be billed accordingly.

WHEN ORDERING REPAIR PARTS, ALWAYS GIVE THE FOLLOWING INFORMATION AS SHOWN IN THIS LIST.

1. The PART NUMBER
2. The PART DESCRIPTION
3. The MODEL NUMBER 917.253430
4. The NAME OF ITEM—TRACTOR SHREDDER ATTACHMENT

When you buy merchandise from Sears you get an extra something that nobody else can offer . . . Sears Service.

Across town or across the country, wherever you live or move in the U.S.A., Sears Service follows you, providing trustworthy, competent service technicians using only Sears specified factory parts.

Sears, Roebuck and Co., Chicago, Ill. 60607 U.S.A.
and Simpsons Sears Limited, Toronto